ATIS Committee NIPP-NAI
Working Group NAI (DSL Access) **NIPP-NAI-2008-006**
Vancouver, BC, Canada: January 21, 2008

CONTRIBUTION

TITLE: **Proposal for Annex C text on Distributed Band Preference for DSM TR Issue 2**

SOURCE:

W. Lee **S. Jagannathan** **J. Cioffi**	**Stanford**	+1-650-723-2150	**cioffi@stanford.edu**
G. Ginis **P. Silverman**	**ASSIA**	+1-650-654-3400	gginis@assia-inc.com

PROJECT: **DSM**

ABSTRACT

This contribution proposes text describing usage examples of the Distributed Band Preference algorithm for inclusion in Annex C of the DSM TR.

NOTICE

This contribution has been prepared to assist Accredited Standards Committee T1–Telecommunications. This document is offered to the Committee as a basis for discussion and is not a binding proposal on the authors or any of their companies. The requirements are subject to change in form and numerical value after more study. The authors specifically reserve the right to add to, amend, or withdraw the statements contained herein.

- CONTACT: J.M. Cioffi, Cioffi@stanford.edu, Tel: +1-650-723-2150 ; Fax: +1-650-724-3652

Proposal for Annex C text on Distributed Band Preference for DSM TR Issue 2

W. Lee, S. Jagannathan, and J. Cioffi

Dept of EE, Stanford University
363 Packard EE, Stanford, CA 94305-9515
Cioffi@stanford.edu,
P: +1-650-723-2150 ; Fax: +1-650-724-3652

G. Ginis and P. Silverman

ASSIA Inc.
303 Twin Dolphin Drive, Suite 203
Redwood City, CA 94065
gginis@assia-inc.com ,
+1-650-654-3400, Fax: +1-650-654-3404

ABSTRACT

This contribution proposes text describing usage examples of the Distributed Band Preference algorithm for inclusion in Annex C of the DSM TR.

1. Introduction 1
2. Proposed Section for Annex C 1
C.4 Distributed Band Preference Examples 1
C.4.1 ADSL CO/RT situation 2
C.4.2 Upstream VDSL 3
C.4.3 Multiple User examples 3
Table C.4.1 – VDSL system parameters. 4
3. Summary 6
4. References 6

1. Introduction

Distributed Band Preference (DBP) has been shown to achieve large data-rate gains and power-savings via several contributions in the NIPP-NAI committee [1] [2] [3] [4]. The various contributions have comprehensively investigated the value of the algorithm in DSM Level 2. Text describing Distributed Band Preference for inclusion in Annex A of the DSM TR was proposed in [5]. Usage examples for inclusion in Annex C are proposed below. The examples can either be appended at the end of the current Annex C or merged along with the existing examples.

2. Proposed Section for Annex C

C.4 Distributed Band Preference Examples

C.4.1 ADSL CO/RT situation

The loop configuration shown in Figure C.4.1 (from DSM-TR) is considered, where an ADSL line fed through a Central Office (CO) shares a binder with an ADSL line fed through a Remote Terminal (RT), and where both are controlled by a single SMC. For Distributed Band Preference (DBP), the SMC transmits the strong/weak line indication to each user and also transmits the cut-off frequency to the strong user. Figure C.4.2 shows the performance of three different methods including DBP. For DBP, the cut-off frequency varies from 0.5 to 0.7 MHz depending on the target data rates of line 2.

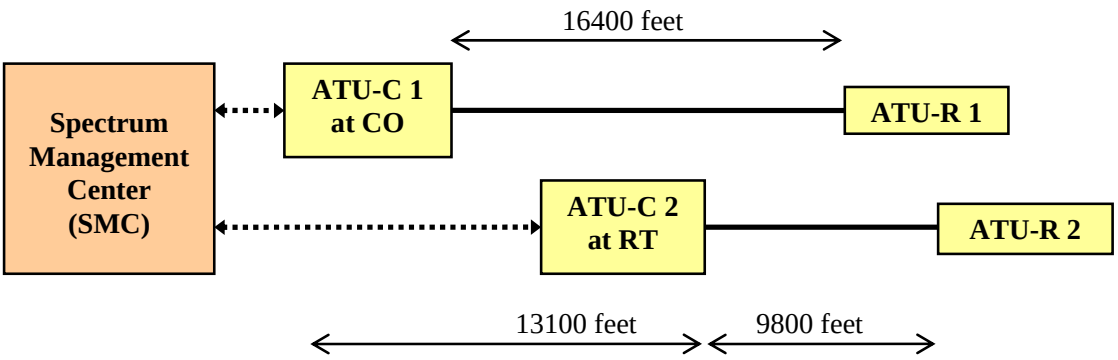

Figure C.4.1 Loop configuration for DSM example with ADSL equipment.

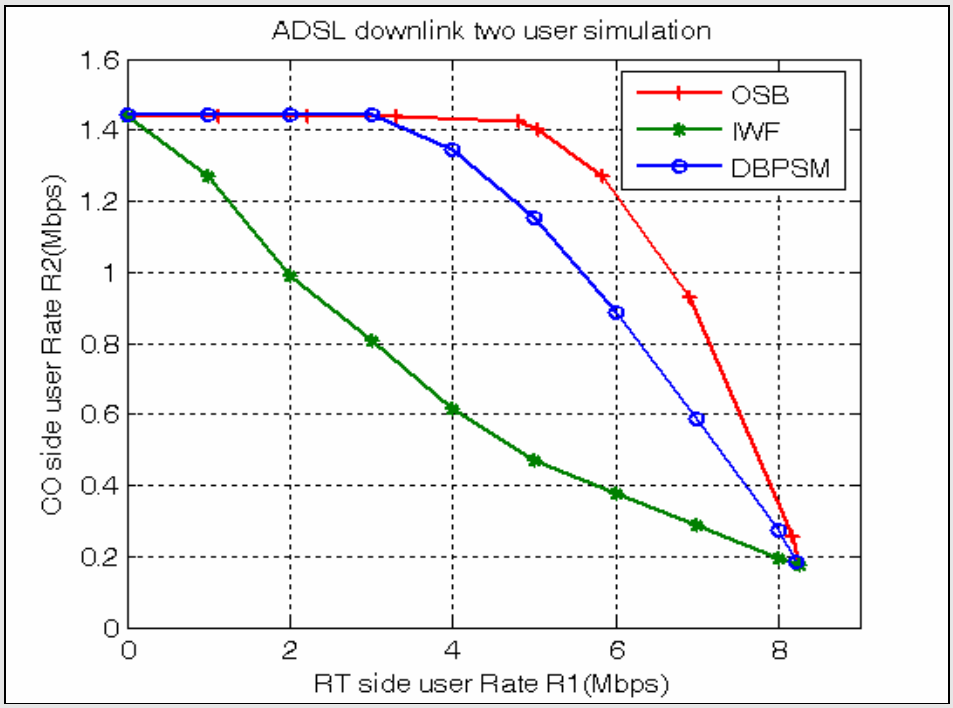

Figure C.4.2 – Performance of various methods for the situation of Figure C.4.1.

C.4.2 Upstream VDSL

Figure C.4.3 illustrates band-preference at work for the situation of Figure 1 in [5] with 600 m and 1200 m upstream VDSL lines. There, as is the case for practical situations of interest in Level 2 DSM, band preference gets extremely close to the theoretical optimum performance. In this case, the cut-off frequency is simply set as the right end of US1 band (5.2MHz) regardless of target rates of a short line while optimizing the cut-off frequency will definitely increase the overall performance of DBP.

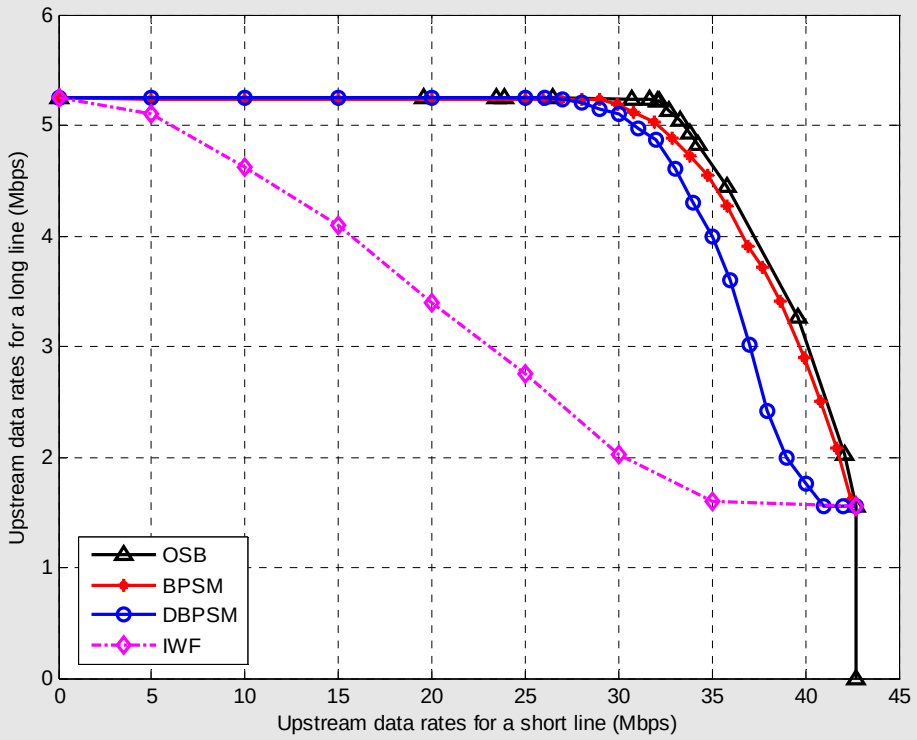

Figure C.4.3 – Performance of various methods for the situation of Figure 1 in [5].

These simple two-user examples for ADSL downstream and VDSL upstream illustrate the benefit of DBPSM clearly. However the gain from DBPSM for multiple users is obtained without any increased complexity. Multiple-user examples are shown in the next section to provide an idea of realistic savings in various practical scenarios.

C.4.3 Multiple User examples

Figure C.4.4 shows the line lengths for 10 upstream DSLs. This example will use DSM Level 2 control in the upstream. The SMC has all information about these lines including channel gains, crosstalk insertion loss transfers, measured noises or SNRs, and rate targets. With this information, the SMC will determine those lines upon which to request the use of the strong algorithm by setting the strong/ weak bit to 1, and which lines will use the weak algorithm (default or setting the same the strong/ weak bit set to 0). In this example, the SMC selects lines 1 to 5 for use of the strong algorithm, and lines 6 to 10 for the weak algorithm. Since it is hard to visualize a 10-dimensional rate region, Figure C.4.5 plots a 2-dimensional rate region of R_1 versus $\sum_{i=6}^{10} R_i$, where R_i is the data-rate of line i, by fixing other users rates

to [10 8 6 5] Mbps respectively (lines 2 to 5). The DSLs running the weak algorithm will maximize their rates under the VDSL upstream power constraint of 14.5 dBm at 6 dB of margin, and line 1 sweeps its data rate from 0 to 36 Mbps to see its effect on the long lines' rate-sum. As line 1 increases its data rate, the other strong lines also change their power and bit allocations to satisfy their fixed rate-targets. Therefore, the weak lines see increased interference as line 1 increases its data rate. However, as seen in Figure C.4.5, line 1 loads its tones in a polite way to minimize the interference to weak lines.

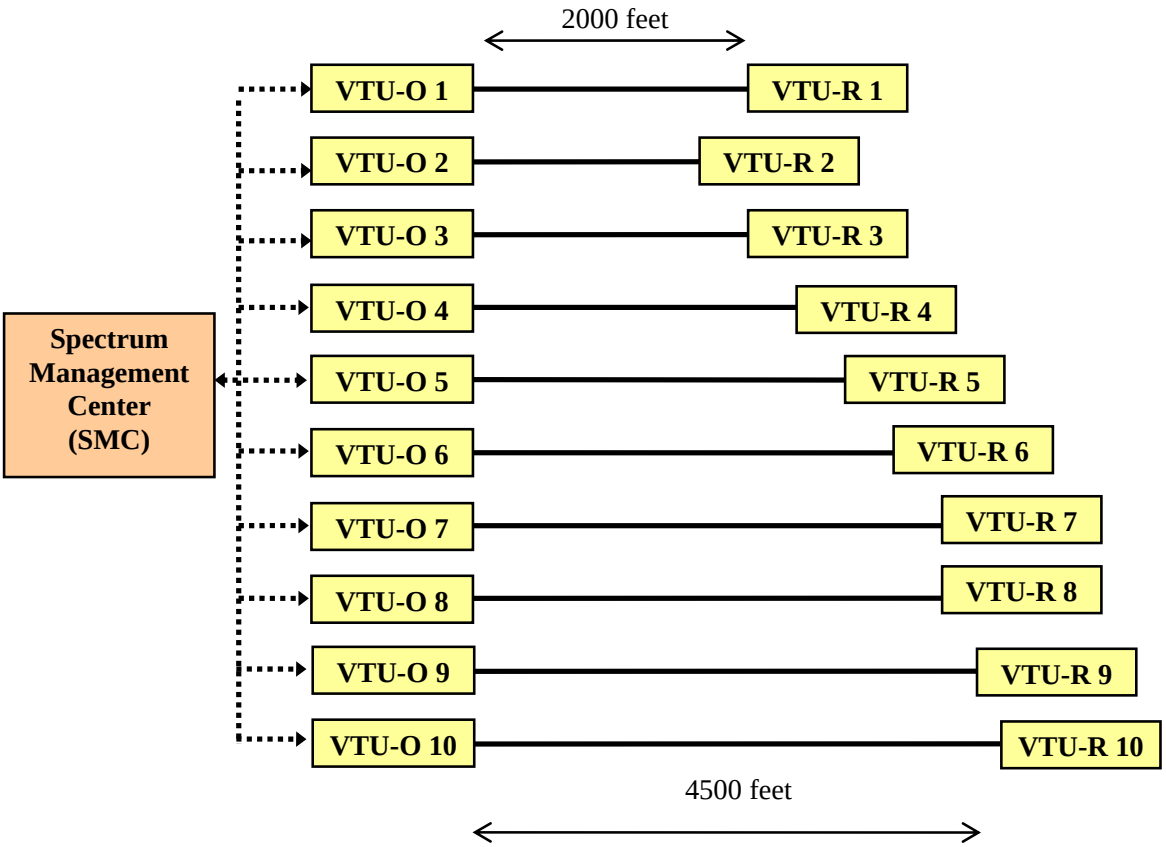

Figure C.4.4 Loop configuration for DSM example with VDSL equipment.

Parameter	Value
Tone Width	4.3125 kHz
Number of Tones	4096
Maximum Upstream Power	14.5 dBmW
Coding Gain	3 dB
Target Margin	6 dB
Gap	9.8 dB
Band-plan	VDSL 2, 17MHz
Bit-cap	15

Table C.4.1 – VDSL system parameters.

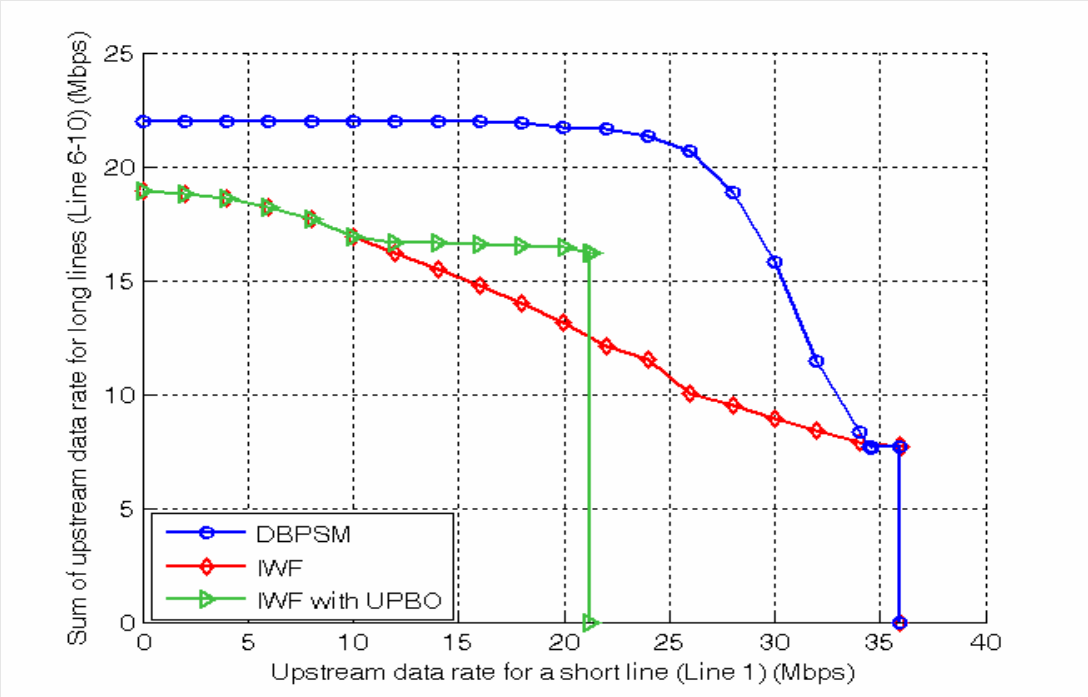

Figure C.4.5 – Performance of various methods for the situation of Figure C.4.4.

The previous example shows the enlargement of achievable regions by using Level 2 DSM. Another main benefit of Level 2 DSM is power reduction. The larger rate region means that inner points can be achieved by using less power, and therefore, Level 2 DSM can save power compared to other methods. Figure C.4.6 shows the power required per line for achieving (18,14) Mbps point of Figure C.4.5. In this simulation, the probability of being on-state is defined as the probability of being active. Then, there can be 1024 possible line configurations, and the probability of each configuration is computed assuming the independence of activity. For example, the probability of having L(i)= [1 1 0 1 1 1 1 1 0 0] (user 3,9,10 are off) is

$$p(k) = p_{on}{}^{7}(1-p_{on})^{3},$$

where p_{on} is the probability of being active for each line. By running simulations for all possible configurations and multiplying the required power with these probabilities, average power of active lines can be obtained as follows.

$$P_{avg} = \frac{1}{10}\sum_{k=1}^{1024} P_{tot}(k)\,p(k)\,/\,p_{ON}\,,$$

where $P_{tot}(k)$ refers to the total power used by lines for *k*-th line configuration and $p(k)$ refers to the probability of *k*-th line configuration.

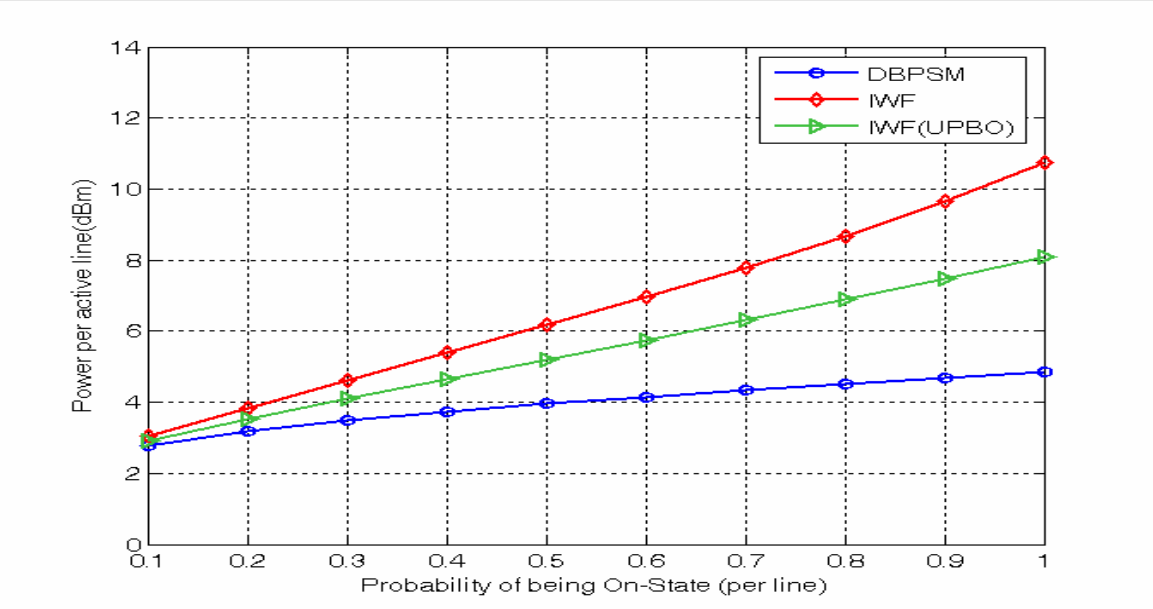

Figure C.4.6 – Power reduction with Level 2 for (18, 14) Mbps point in Figure C.4.5

3. Summary

The text is proposed for inclusion in Annex C of the DSM TR.

4. References

[1] J.Cioffi, W. Lee, Y. Kim, and M. Brady, "DSL Level 2 Distributed Band Preference," *ATIS Contribution NIPP-NAI 2007-056R1*,Minearpolis, MN, May 14, 2007.

[2] J.Cioffi, W. Lee, S. Jagannathan, and G. Ginis, "The Inherent Simplicity of Distributed Band Preference," *ATIS Contribution NIPP-NAI 2007-129R1*, Miami, FL, September 24, 2007.

[3] J. Cioffi, W. Lee, S. Jagannathan, G. Ginis, and P. Silverman, "DSM Level 2: Polite and Efficient Access-Network Throughput Increase," *ATIS Contribution NIPP-NAI 2007-159*,Vancouver, Canada, November 12, 2007.

[4] W. Lee, S. Jagannathan, J.Cioffi, G. Ginis, and P. Silverman "Higher-Rate Level 2 DSM Power-Saving Examples," *ATIS Contribution NIPP-NAI 2007-160*,Vancouver, Canada, November 12, 2007.

[5] W. Lee, S. Jagannathan, J.Cioffi, G. Ginis, and P. Silverman "Proposal for Annex A text on Distributed Band Preference for DSM TR Issue 2," *ATIS Contribution NIPP-NAI 2008-005*, Vancouver, Canada, January 21, 2008