ATIS Committee NIPP-NAI
Working Group NAI (DSL Access) **NIPP-NAI-2008-007**
Vancouver, Canada: January 21, 2008

CONTRIBUTION

TITLE: **Further examples on Level 2 DSM Power-Saving**

SOURCE:

W. Lee	**Stanford**	+1-650-723-2150	**cioffi@stanford.edu**
S. Jagannathan			
J. Cioffi			
G. Ginis	**ASSIA**	+1-650-654-3400	gginis@assia-inc.com
P. Silverman			

PROJECT: **T1E1.4, DSM, Information only**

ABSTRACT

This contribution provides additional examples to illustrate the gains in contributions [1], and [2] from the November 2007 NIPP-NAI meeting.

NOTICE

This contribution has been prepared to assist Accredited Standards Committee T1–Telecommunications. This document is offered to the Committee as a basis for discussion and is not a binding proposal on the authors or any of their companies. The requirements are subject to change in form and numerical value after more study. The authors specifically reserve the right to add to, amend, or withdraw the statements contained herein.

- CONTACT: J.M. Cioffi, Cioffi@stanford.edu, Tel: +1-650-723-2150 ; Fax: +1-650-724-3652

Further examples on Level 2 DSM Power-Saving

W. Lee, S. Jagannathan, and J. Cioffi

Dept of EE, Stanford University
363 Packard EE, Stanford, CA 94305-9515
Cioffi@stanford.edu,
P: +1-650-723-2150 ; Fax: +1-650-724-3652

G. Ginis and P. Silverman

ASSIA Inc.
303 Twin Dolphin Drive, Suite 203
Redwood City, CA 94065
gginis@assia-inc.com ,
+1-650-654-3400, Fax: +1-650-654-3404

ABSTRACT

This contribution provides additional examples to illustrate the gains in contributions [1], and [2] from the November 2007 NIPP-NAI meeting.

1. Introduction 1
2. Examples of weak/strong algorithm use 1
   2.1 Upstream VDSL 10 users 1
   2.2 Downstream ADSL2+ CO/RT situation 3
   2.3 Downstream ADSL2+ CO-only situation 5
3. References 6

1. Introduction

Distributed Band Preference (DBP) [1] achieves near-optimal Level 2 DSM performance with very little computational/control burden. This contribution provides additional detailed examples of weak/strong algorithm use, and compares with other methods such as IWF and VN.

2. Examples of weak/strong algorithm use

2.1 Upstream VDSL 10 users

Figure 1 illustrates a line-length distribution for upstream VDSL, which was used in previous contributions [1] [2] to show the power savings of level 2 DSM algorithm. Many other line length distributions could be used without changing the following conclusions. In these simulations, unbundled environment is assumed with two distinct operators in the same binder. The operators for odd numbered lines will use various strategies for VN, while the operator for the even numbered lines uses current VDSL practice without VN. The target data rates (RA = rate adaptive) are:

User Index	1	2	3	4	5	6	7	8	9	10
Target Rate (Mbps)	13	10	8	6	2	RA	1.5	RA	1.5	RA

Figure 2 illustrates the effect of VN by sweeping a virtual noise level from 0, for no VN use, to 1, for VN to use the sum of all sensed crosstalkers (so a value of 1 is the worst-case interference which was proposed for VN). The sum of the 2nd operators' data rates for lines 6, 8, and 10 is plotted both with and without virtual noise.

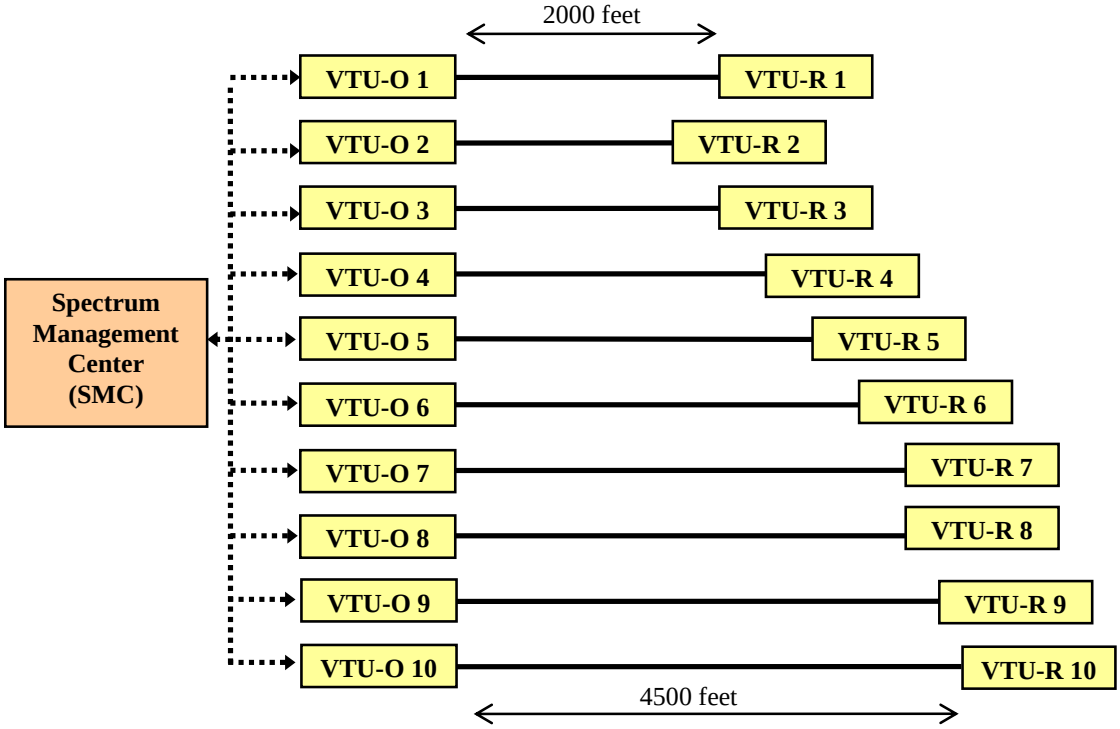

Figure 1- Loop configuration for upstream VDSL examples

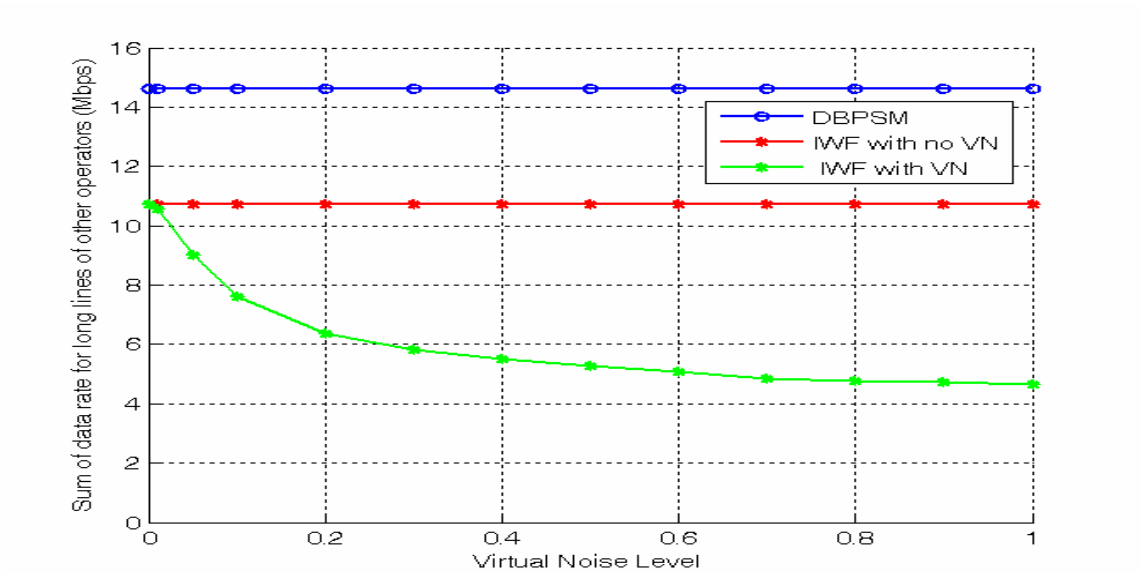

Figure 2 – Illustration of Upstream VDSL VN's loss of data rate by a 2nd service provider when a first provider uses VN. The upper blue curve with DBPSM is when DSM Level 2 band preference is used. The middle red curve with "IWF with no VN" uses simple bit-swapping and maximum margin politeness limits.

2.2 Downstream ADSL2+ CO/RT situation

While the examples above are for VDSL upstream, the same issues arise in downstream interference from ADSL2+ into ADSL1 or other types of binder mixture.

User Index	1	2	3	4	5	6	7	8	9	10
CO/RT Location(kft)	5.25	5.25	5.25	5.25	5.25	0	0	0	0	0
CPE Location(kft)	9	9.75	10.5	10.5	9.75	6	6	7.5	6.75	7.2
Target Rate (Mbps)	10	10	10	10	10	RA	RA	RA	RA	RA

10 users are located roughly 1.8 to 3.2 km from a central office with a target rate of 10 Mbps for video service on those served from a service providers fiber-fed (at 1.6 km) RT in the same binder. The lines emanating from the central office are all allowed to rate adapt to best service possible. One operator using lines 1-5 uses virtual noise. The other CO-based operator does not use VN. The size of VN recommended as worst-case interference is 1 and 0 refers to no VN use. Clearly the 2nd service provider's lines are harmed by the VN use. More examples can be provided for a variety of situations and the losses can be larger in more boundary situations, but the example provided is mid-range in terms of losses to be expected. Figure 4 shows the data rate loss by the 2nd service provider's lines and Figure 5 shows the average power per line required to achieve [10, 10, 10, 10, 10, 5, 5, 5, 5, 5] (Mps) respectively.

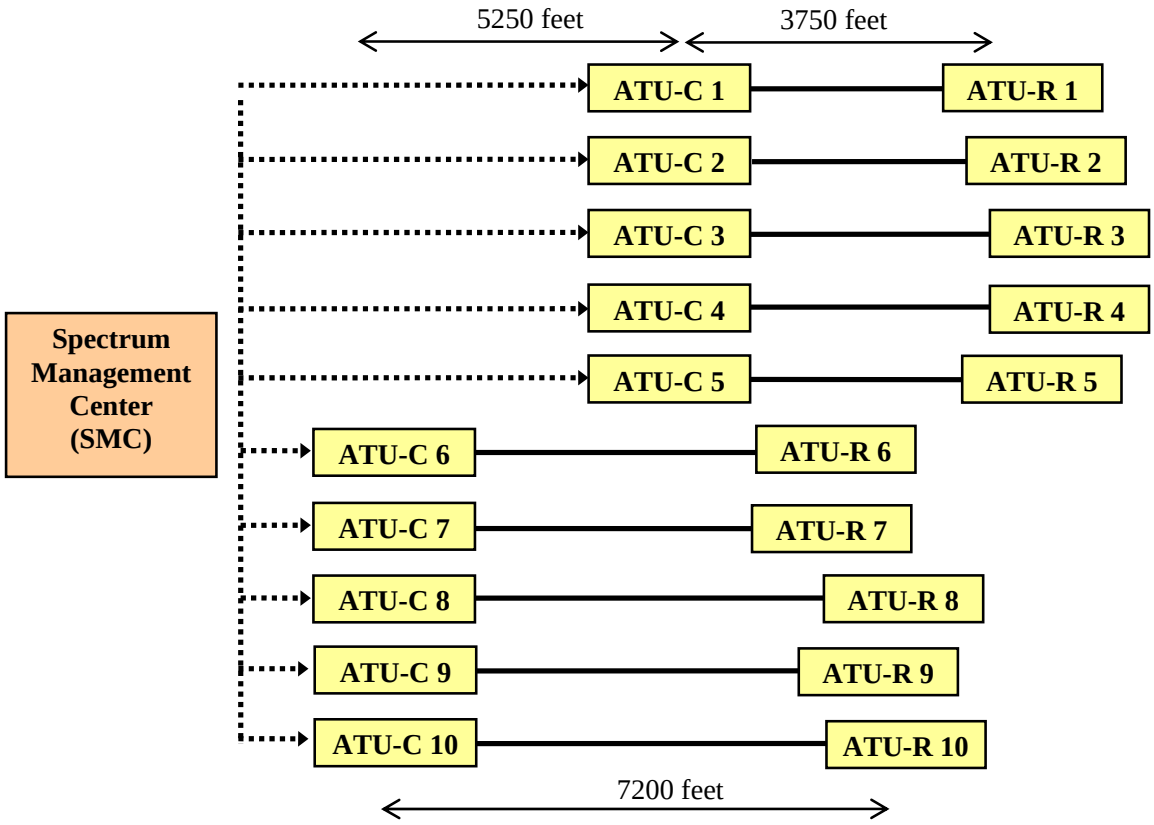

Figure 3- Loop configuration for downstream ADSL2+ examples

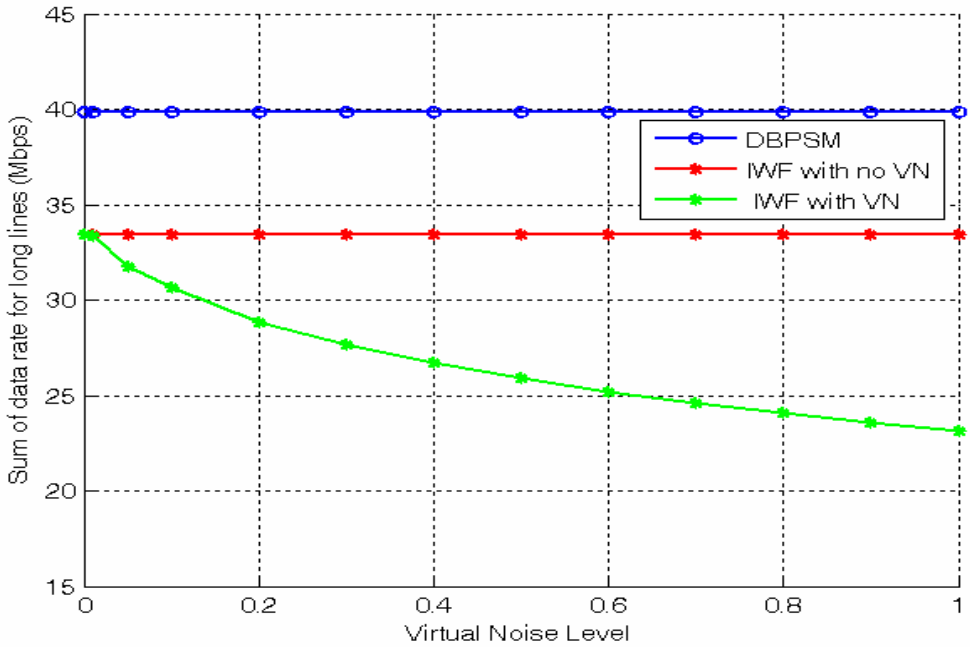

Figure 4 – Illustration of Downstream ADSL2+ VN's loss of data rate by a 2nd service provider when a first provider uses VN.

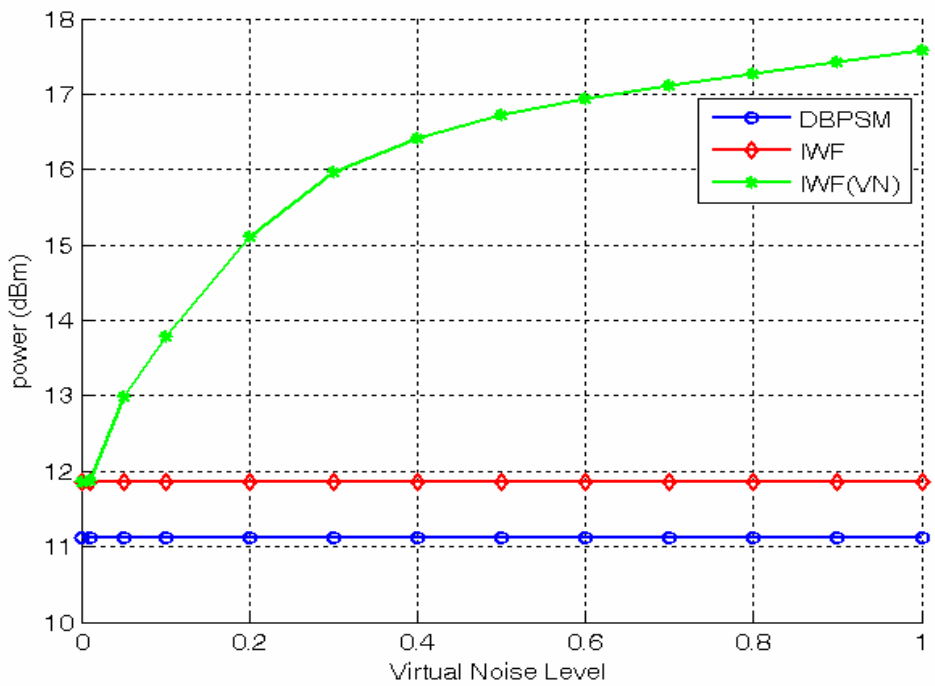

Figure 5 – Illustration of average power transmitted by 10 lines for downstream ADSL2+

2.3 Downstream ADSL2+ CO-only situation

In CO-only downstream, there are no weak and strong users regardless of line length in terms of crosstalk and the performance of IWF and DBPSM is quite close. Even in this case, the same issues regarding virtual noise arise as in the CO/RT mixture situation. In Figure 6, 5 users are located at 1.2 km from a central office where the symmetric line length is assumed for simplicity. Lines 2 – 4 have a target data rate 5Mbps while line 5 has higher rate target at 15 Mbps and also uses virtual noise. Line 1 is allowed to rate adapt to best service possible and the effect of virtual noise is measured based on the achievable data rate of line 1. Figure 7 shows such an effect of virtual noise as the level of virtual noise increases. Figure 8 shows the average power required by each line to achieve the rate targets [15, 15, 15, 15, 15].

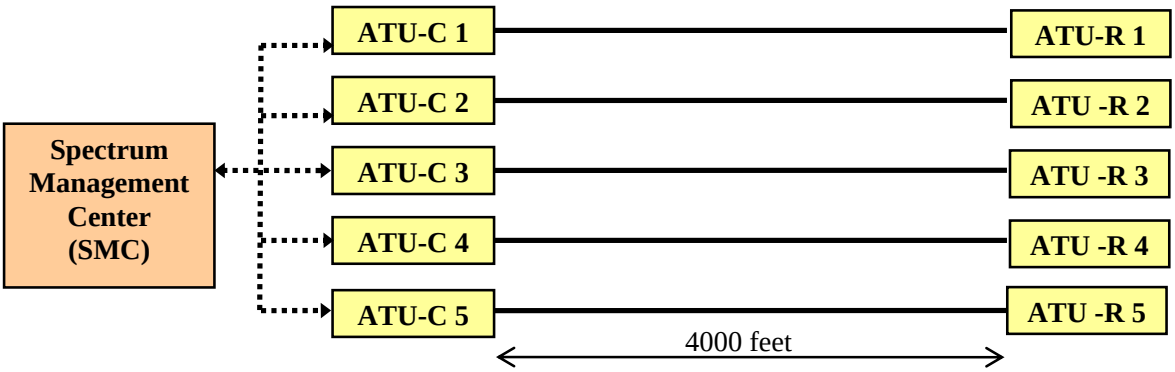

Figure 6- Loop configuration for CO-only downstream ADSL2+ examples

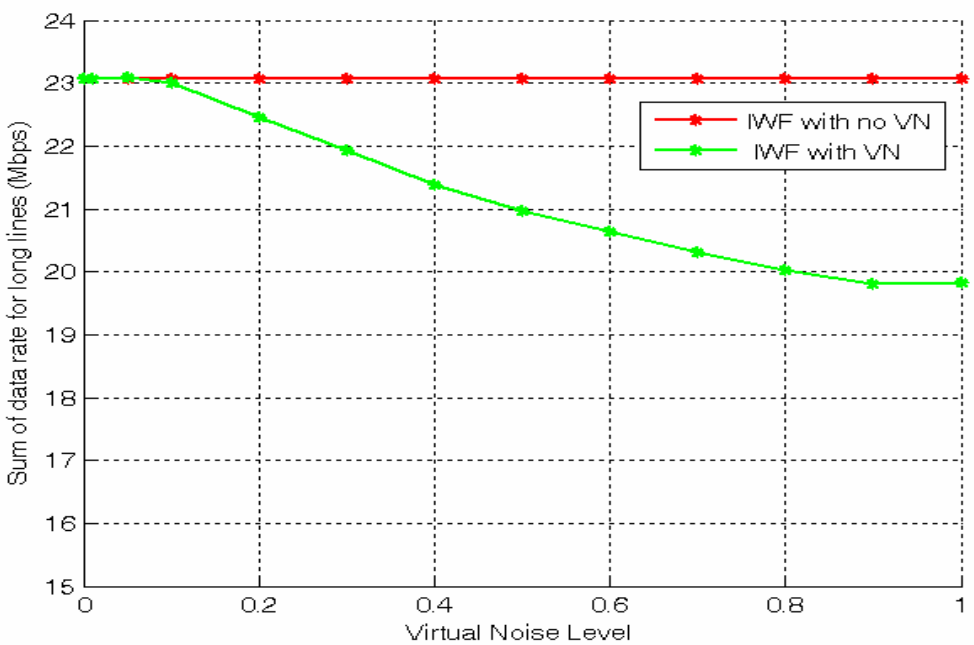

Figure 7 – Illustration of Downstream ADSL2+ VN's loss of data rate by line 1

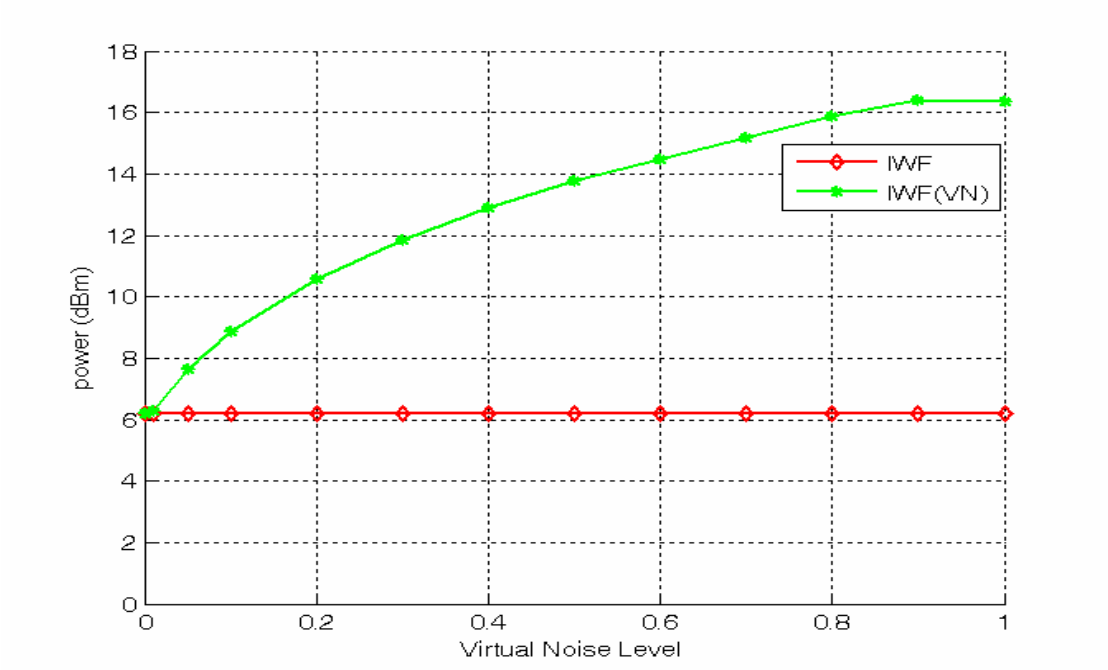

Figure 8 – Illustration of average power transmitted by 5 lines for downstream ADSL2+

3. References

[1] J. Cioffi, W. Lee, S. Jagannathan, G. Ginis, and P. Silverman, "DSM Level 2: Polite and Efficient Access-Network Throughput Increase," *ATIS Contribution NIPP-NAI 2007-159,*Vancouver, Canada, November 12, 2007.

[2] W. Lee, S. Jagannathan, J.Cioffi, G. Ginis, and P. Silverman "Higher-Rate Level 2 DSM Power-Saving Examples," *ATIS Contribution NIPP-NAI 2007-160,*Vancouver, Canada, November 12, 2007.